2210/2210DPS -THRU 180° OPENING	
AUXILIARY STOP RECOMMENDED	
LEFT HAND DOOR AND CLOSER SHOWN. RIGHT HAND OPPOSITE	6/96

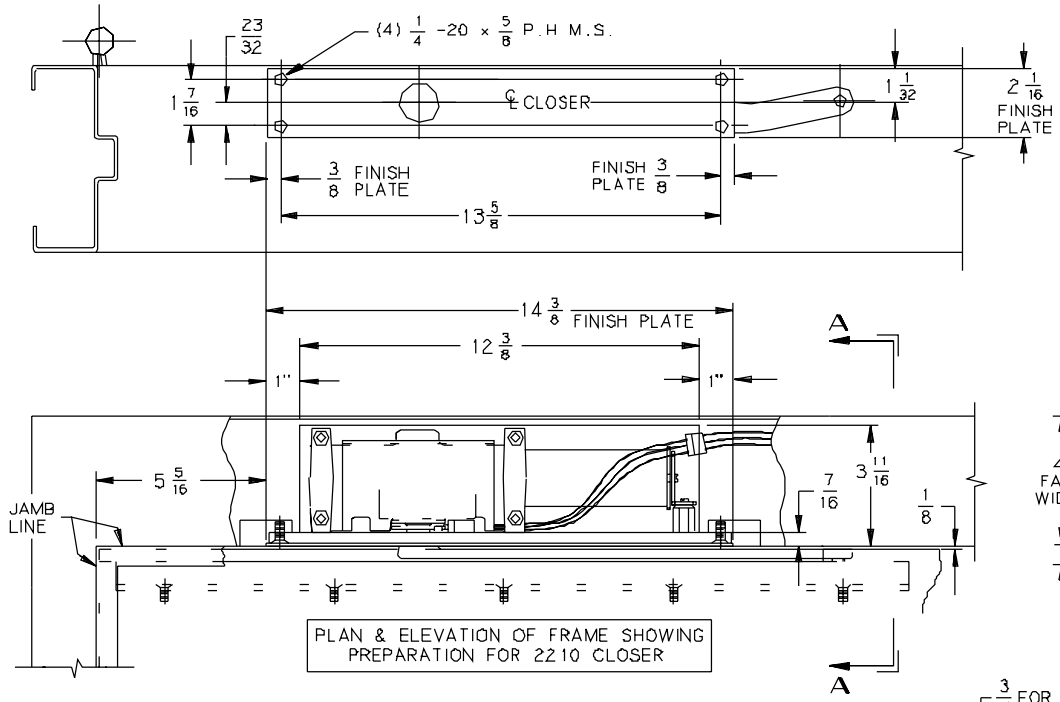

PLAN & ELEVATION OF FRAME SHOWING PREPARATION FOR 2210 CLOSER

GENERAL NOTES-

1 - FOR 180° OPENINGS, MAXIMUM ALLOWABLE BUTT SIZE IS 4 1/2" x 4 1/2" OPEN WIDTH.

2 - MINIMUM STOP THICKNESS 5/8".

3 - 1/8" DOOR TO SOFFIT CLEARANCE REQUIRED

4 - RECOMMEND CASED FRAME AND APPLIED STOP FOR 1 3/4" DOOR. MOUNT APPLIED STOP WITH TORX WITH PIN MACHINE SCREWS.

5 - THIS TEMPLATE SHOWS A 4" FACE WIDTH FRAME HEAD WITH A 2" AND 1 3/4" DOOR THICKNESS ANY OTHER DEVIATION CONSULT FACTORY

6 - REINFORCING PER ANSI/SDI-100 RECOMMENDED FOR HOLLOW METAL DOOR AND FRAMES.

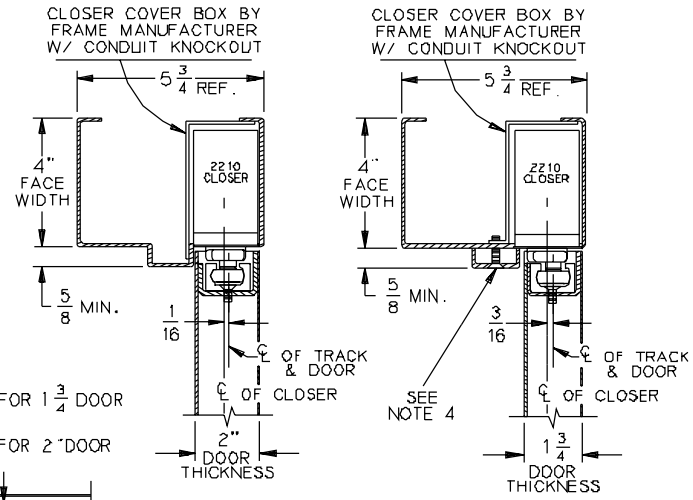

SECTION A - A

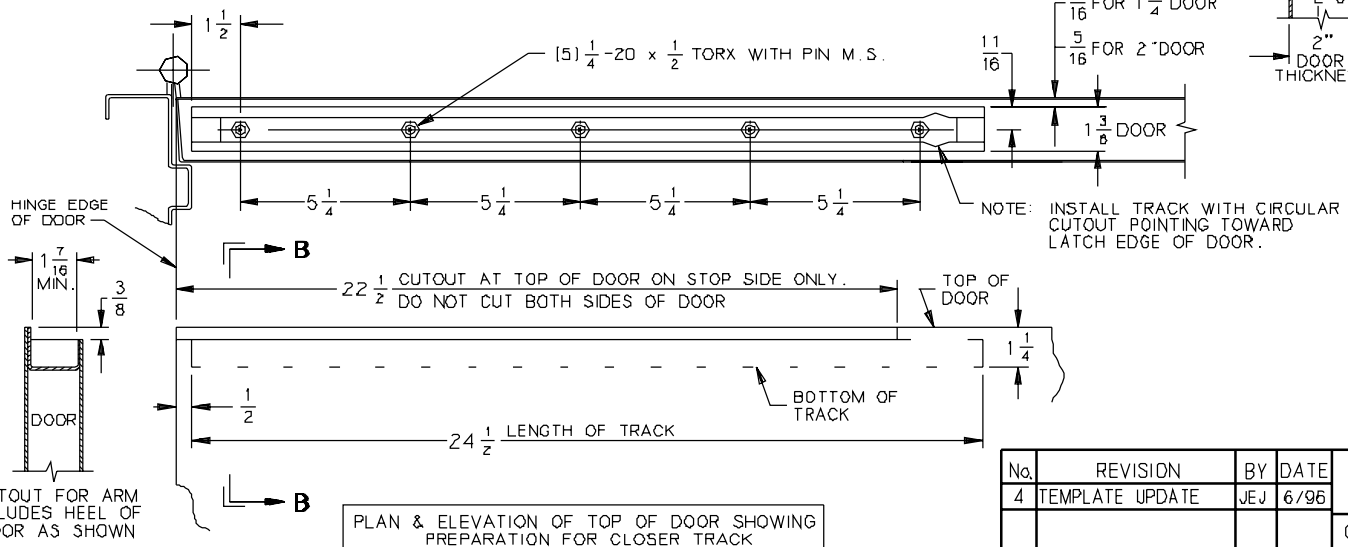

CUTOUT FOR ARM INCLUDES HEEL OF DOOR AS SHOWN

SECTION B - B

PLAN & ELEVATION OF TOP OF DOOR SHOWING PREPARATION FOR CLOSER TRACK

AUXILIARY STOP RECOMMENDED

INCH	1/16	1/8	3/16	1/4	5/16	3/8	7/16	1/2	5/8	11/16
M.M.	2	3	5	6	8	10	11	13	16	17

INCH	23/32	1	1 1/32	1 1/4	1 7/16	1 1/2	1 3/4	2	2 1/16	3 11/16
M.M.	18	25	26	32	37	38	45	51	52	94

INCH	4	4 1/2	5 1/4	5 5/16	5 3/4	12 3/8	13 5/8	14 3/8	22 1/2	24 1/2
M.M.	102	114	133	135	146	314	346	365	572	622

No.	REVISION	BY	DATE
4	TEMPLATE UPDATE	JEJ	6/96

LCN®

APP BY JEJ 6/96

DO NOT SCALE

OVERHEAD CONCEALED CLOSER WITH CONCEALED ARM (WITH OR WITHOUT DOOR POSITION SWITCH)

2210/2210DPS

1

© 2000 Ingersoll-Rand Company