4311 HSA - HOLD OPEN ANY POINT 80° TO 160°	
AUXILIARY STOP RECOMMENDED AT MAXIMUM HOLD OPEN	
RIGHT HAND SHOWN. LEFT HAND OPPOSITE	12/96

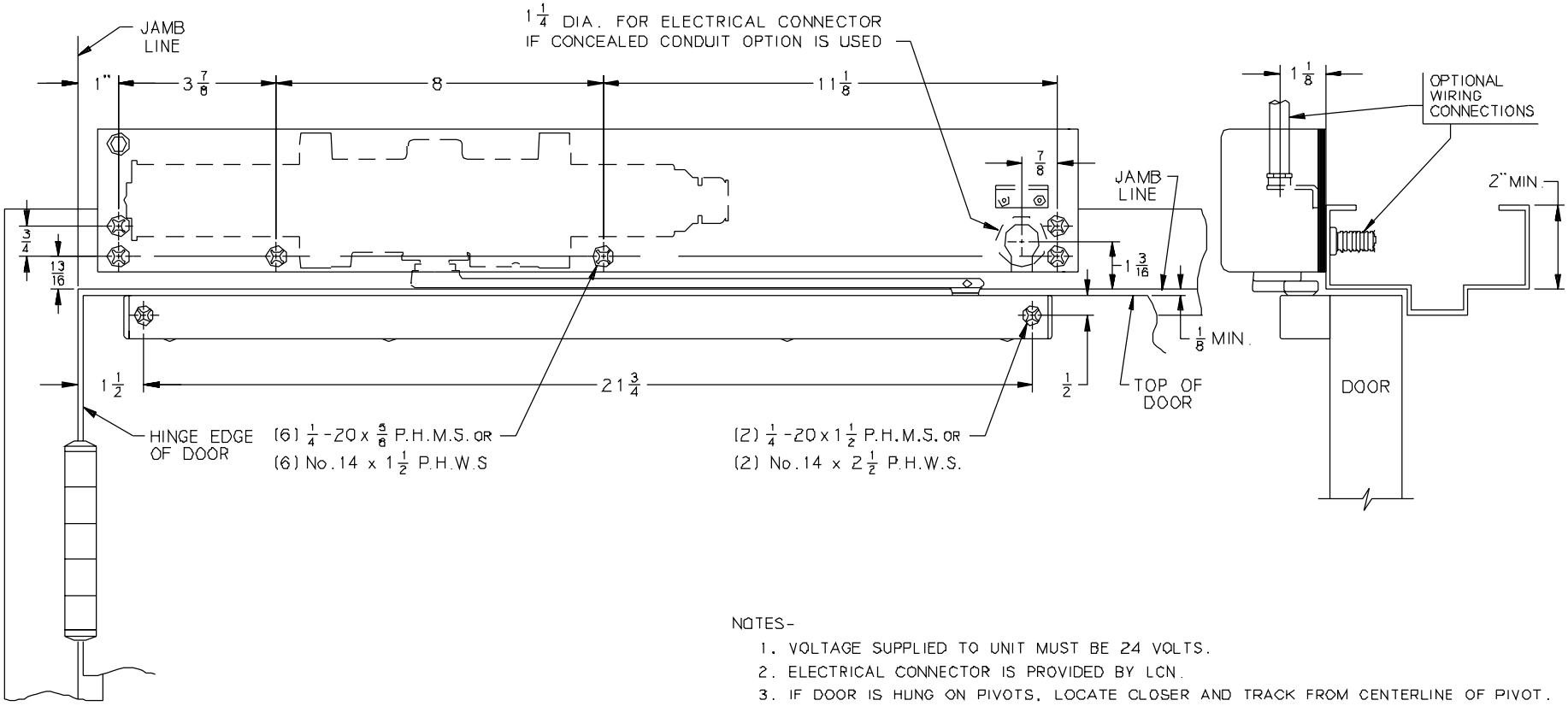

NOTES-

1. VOLTAGE SUPPLIED TO UNIT MUST BE 24 VOLTS.
2. ELECTRICAL CONNECTOR IS PROVIDED BY LCN.
3. IF DOOR IS HUNG ON PIVOTS, LOCATE CLOSER AND TRACK FROM CENTERLINE OF PIVOT.
4. IF DOOR IS HUNG ON SWING CLEAR HINGES, CONSULT FACTORY.
5. FLOOR OR WALL STOPS MUST BE USED AT MAXIMUM HOLD OPEN POINT.
6. FOR ADDITIONAL INFORMATION ON RECOMMENDED USE OF THIS UNIT CONSULT NFPA-72E PAMPHLET.
7. REINFORCING PER ANSI/SDI-100 RECOMMENDED FOR HOLLOW METAL DOORS AND FRAMES.

INCH	1/8	1/4	1/2	5/8	3/4	13/16	7/8	1	1 1/8
M.M.	3	6	13	16	19	21	22	25	29

INCH	1 3/16	1 1/4	1 1/2	2	2 1/2	3 7/8	8	11 1/8	21 3/4
M.M.	30	32	38	51	64	98	203	283	553

No.	REVISION	BY	DATE

LCN®

DRW BY JTA 1/97

DO NOT SCALE

4311 HSA HINGE FACE OVER DOOR MOUNTED CLOSER / SCANNER ACTIVATED HOLD OPEN

4311 HSA

© 2000 Ingersoll-Rand Company