6031-CP, 6032-CP, 6033-CP, 6034-CP, 6035-CP	NON HOLD OPEN (UP TO 95°) H-90 (80° TO 95°) MAX. OPENING 95°
AUXILIARY STOP RECOMMENDED	
CONCEALED DOUBLE ACTING CLOSER	6/96

PIVOT, DOOR, TRACK AND CLOSER MUST ALL USE SAME CENTERLINE.

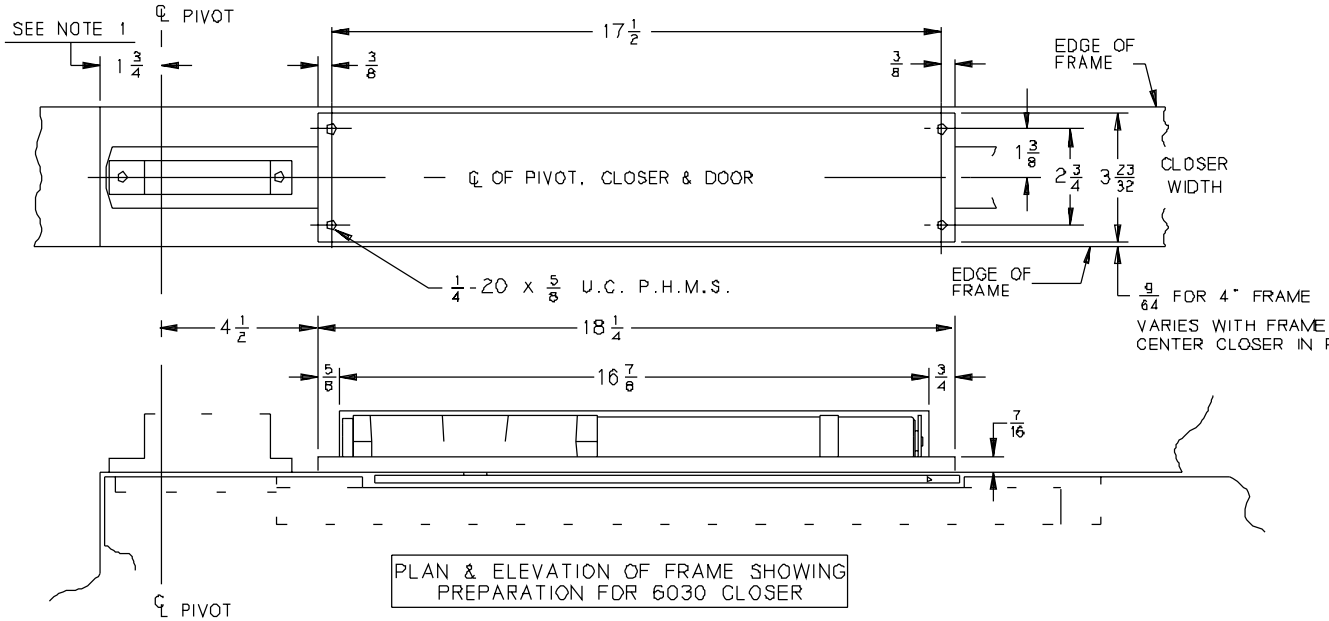

PLAN & ELEVATION OF FRAME SHOWING PREPARATION FOR 6030 CLOSER

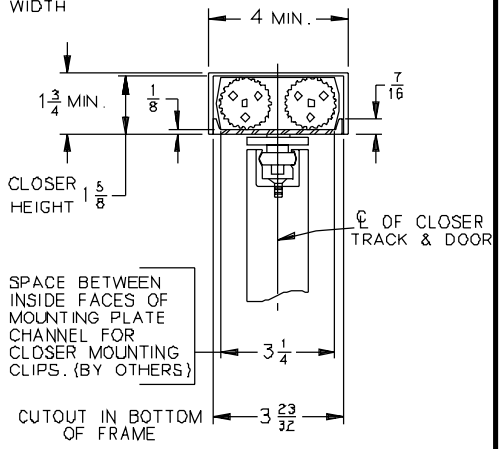

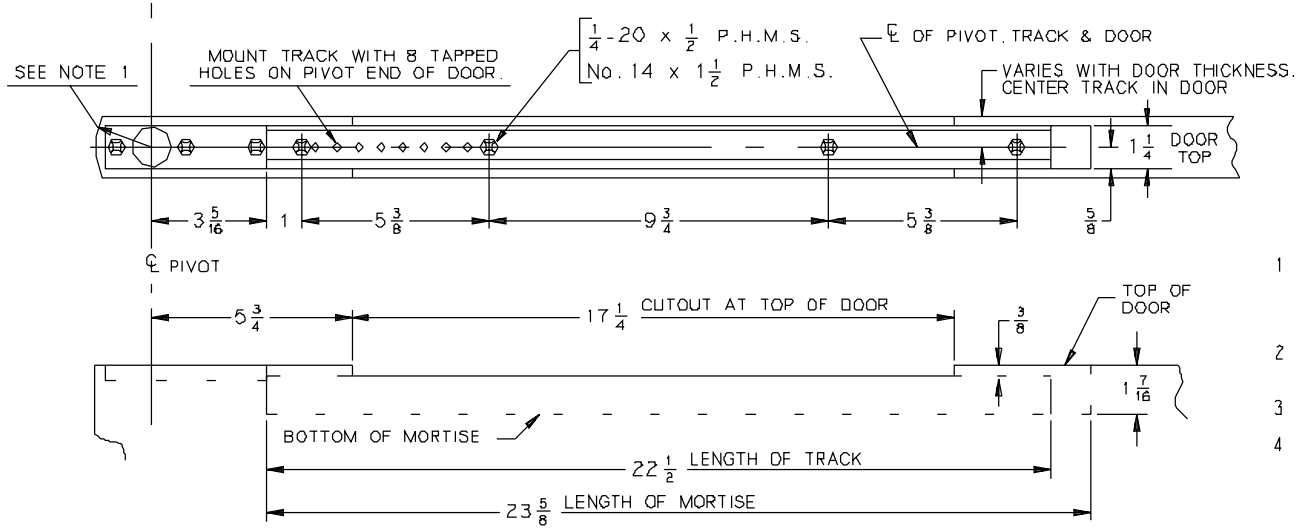

PLAN & ELEVATION OF TOP OF DOOR SHOWING PREPARATION FOR CLOSER TRACK

NOTES :

1 - PIVOT CENTER MAY BE VARIED AS DESIRED. MINIMUM ALLOWABLE IS $1\frac{3}{4}$". AS SHOWN. HEEL OF DOOR RADIUS MUST NOT EXCEED ℄ OF PIVOT TO JAMB DISTANCE.

2 - FOR PIVOT INSTALLATION DETAILS, SEE 7250 SERIES PIVOT TEMPLATE.

3 - $\frac{1}{8}$" DOOR TO SOFFIT CLEARANCE REQUIRED.

4 - REINFORCING PER ANSI/SDI-100 RECOMMENDED FOR HOLLOW METAL DOOR AND FRAMES.

inch	$\frac{1}{8}$	$\frac{9}{64}$	$\frac{1}{4}$	$\frac{3}{8}$	$\frac{7}{16}$	$\frac{1}{2}$	$\frac{5}{8}$	$\frac{3}{4}$	1	$1\frac{1}{4}$	$1\frac{3}{8}$	$1\frac{7}{16}$	$1\frac{1}{2}$	$1\frac{5}{8}$	$1\frac{3}{4}$
mm	3	4	6	10	11	13	16	19	25	32	35	37	38	41	44

inch	$2\frac{1}{4}$	$3\frac{1}{4}$	$3\frac{5}{16}$	$3\frac{23}{32}$	4	$4\frac{1}{2}$	$5\frac{3}{8}$	$5\frac{3}{4}$	$9\frac{3}{4}$	$16\frac{7}{8}$	$17\frac{1}{4}$	$17\frac{1}{2}$	$18\frac{1}{4}$	$22\frac{1}{2}$	$23\frac{5}{8}$
mm	70	83	84	94	102	114	137	146	248	429	438	445	464	572	600

No.	REVISION	BY	DATE
1	CAD CONVERSION	CTB	8/93
2	TEMPLATE UPDATE	JEJ	6/96

LCN®

APP BY JEJ 6/96

DO NOT SCALE

OVERHEAD CONCEALED DOUBLE ACTING CLOSER WITH CENTER PIVOTS

6030-CP

© 2000 Ingersoll-Rand Company