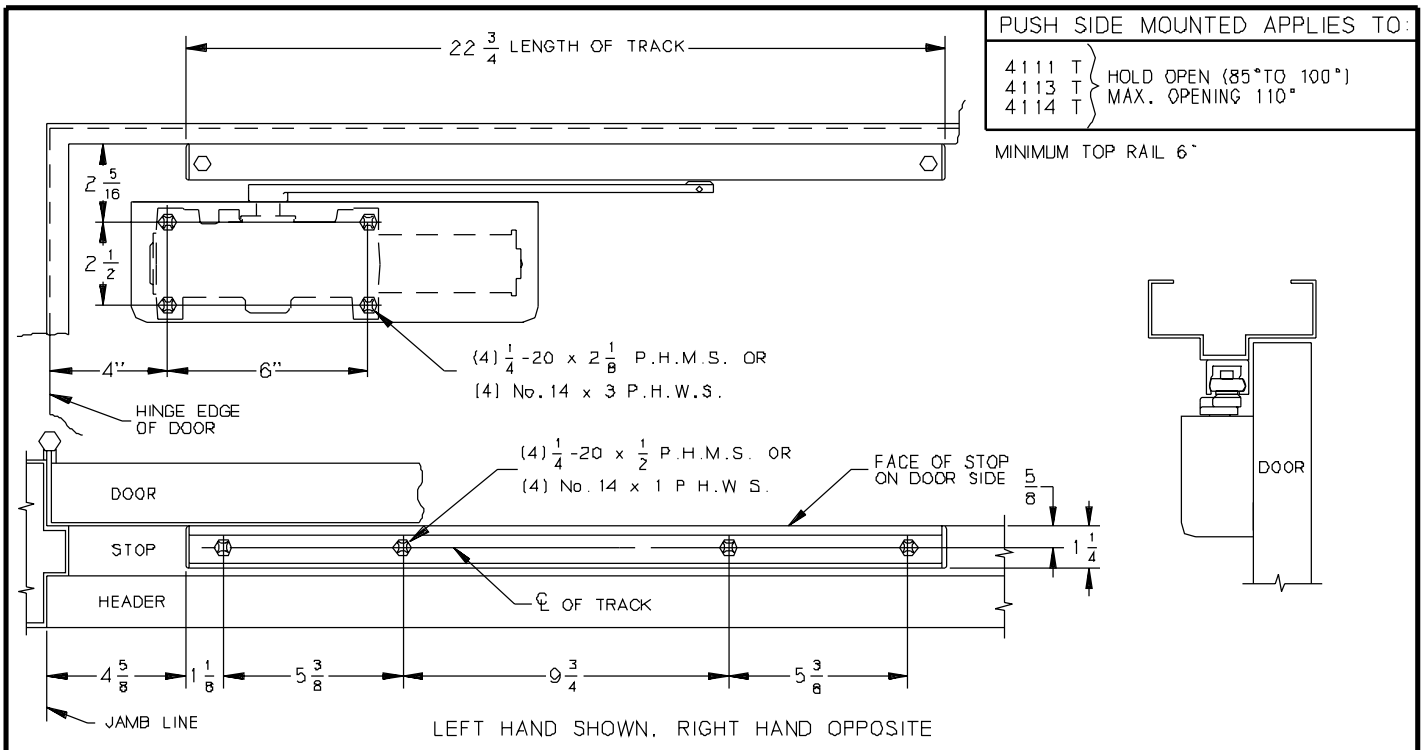

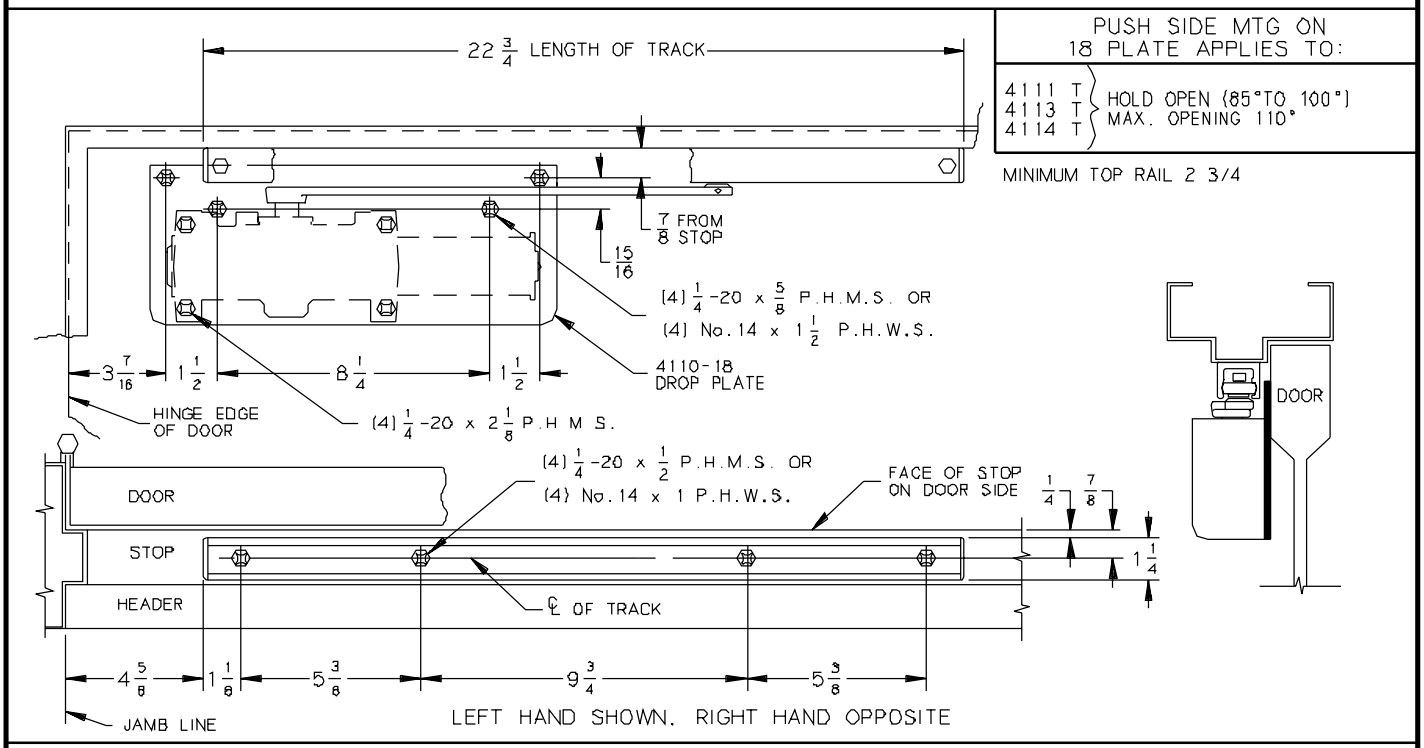

AUXILIARY STOP RECOMMENDED

GENERAL NOTES-

1. CLOSER SIZE: 12 1/4 x 3 1/2 x 2 5/32 (2 3/8 WITH DROP PLATE).
2. LOCATE CLOSER & TRACK FROM ℄ OF PIVOT OR SWING CLEAR HINGE PIN IF USED.
3. REINFORCING PER ANSI/SDI-100 RECOMMENDED FOR HOLLOW METAL DOORS AND FRAMES.

INCH	1/4	1/2	5/8	7/8	15/16	1	1 1/8	1 1/4
M.M.	6	13	16	22	24	25	29	32

INCH	1 1/2	2 1/8	2 5/32	2 5/16	2 3/8	2 1/2	2 3/4	3	3 7/16
M.M.	38	54	55	59	60	64	70	78	87

INCH	3 1/2	4	4 5/8	5 3/8	6	8 1/4	9 3/4	12 1/4	22 3/4
M.M.	89	102	118	137	152	210	248	311	578

No.	REVISION	BY	DATE
3	TEMPLATE UPDATE	JEJ	6/96

LCN®

APP BY JEJ 6/96

DO NOT SCALE

SMOOTHEE CLOSER WITH TRACK (PUSH SIDE MOUNTED) ON DOOR OR DROP PLATE

4110 T

© 2000 Ingersoll-Rand Company